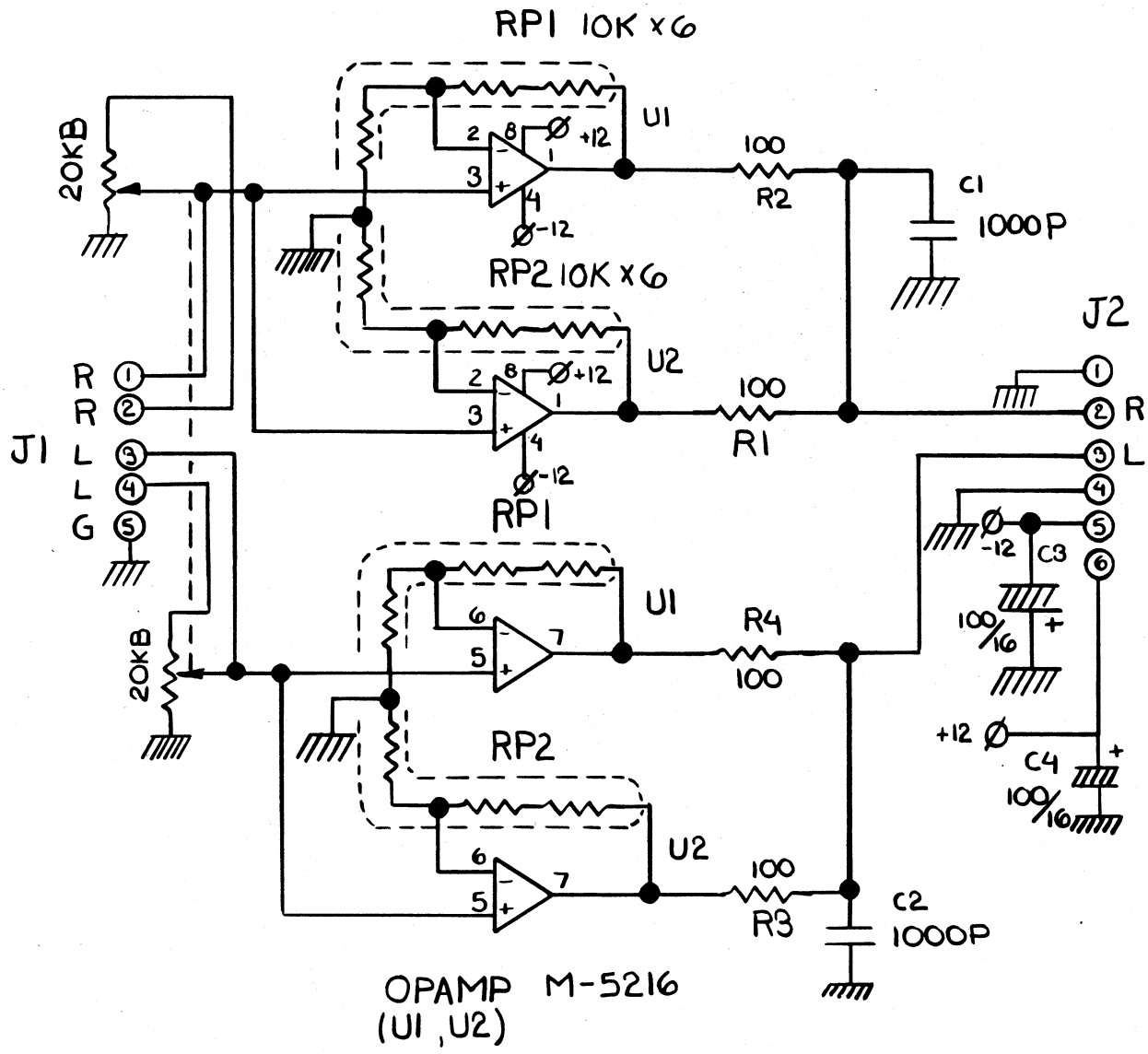


| REV | CHANGE | CKD | ENG |
|---|---|---|---|

THIS DRAWING CONTAINS PROPRIETARY INFORMATION AND IS NOT TO BE RELEASED TO OTHER PARTIES OR REPRODUCED WITHOUT WRITTEN PERMISSION OF KURZWEIL MUSIC SYSTEMS, Inc.

STANDARD TOLERANCES
FRACTIONAL DIMENSIONS ±
DECIMAL DIMENSIONS 0.00 ±
DECIMAL DIMENSIONS 0.000 ±
ANGLES ±
METRIC 0.0 ±
METRIC 0.00 ±
UNLESS OTHERWISE SPECIFIED

KURZWEIL MUSIC SYSTEMS, Inc.
WALTHAM, MA

TITLE K1000 VOLUME SLIDER (SWK 309A)

DRN GF 11/16/88 APPROVED FOR PRODUCTION

| APPROVED ONLY FOR → | QUOTE | ENG | CKD | |
|---|---|---|---|---|
| | SAMPLE | ENG | ENG | |
| | PILOT | CKD | PROD | |
| | | ENG | MATL | |

| SCALE | SIZE | DWG NO | REV |
|---|---|---|---|
| SHEET OF | | | |